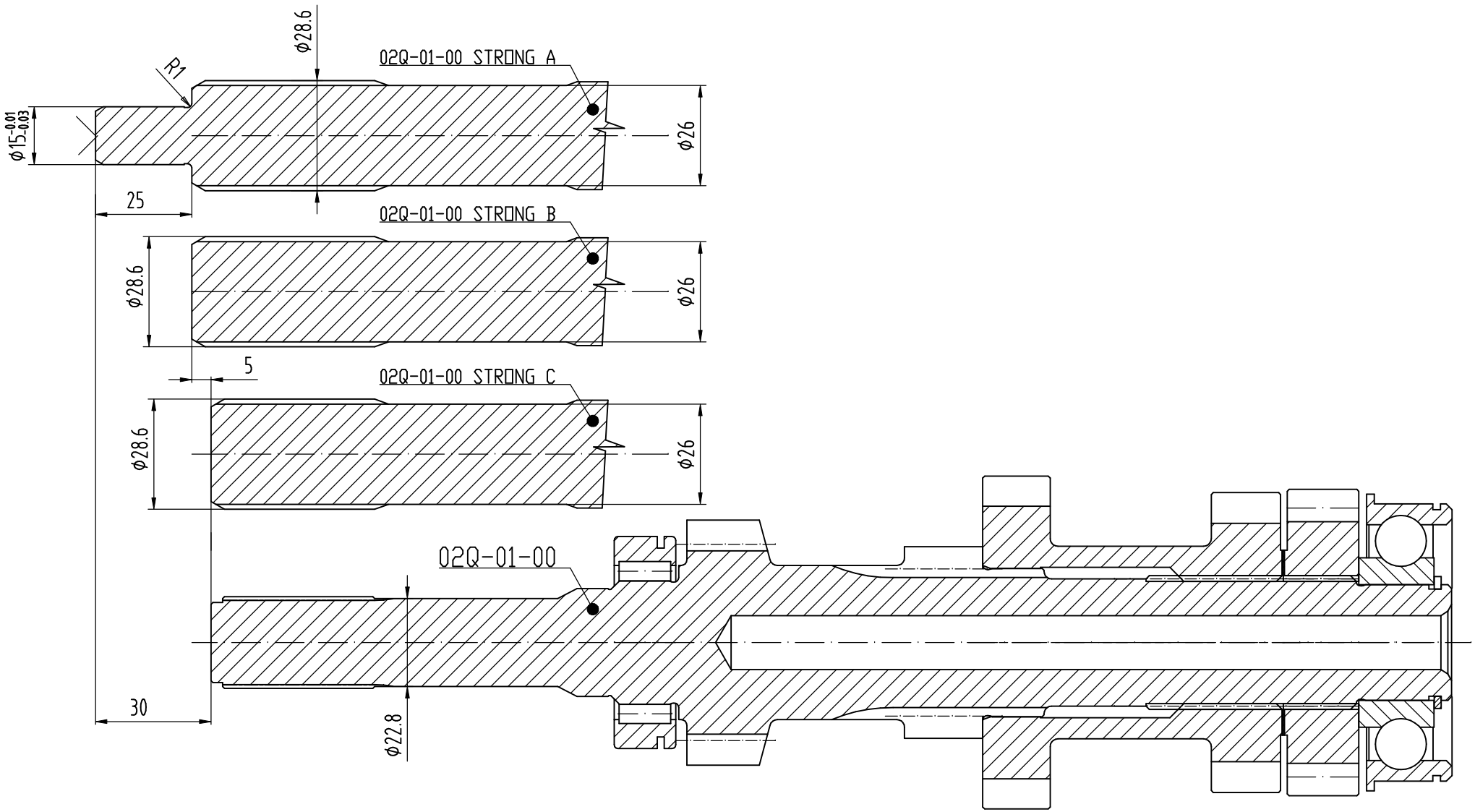
02Q-01-00 STRONG A
02Q-01-00 STRONG B
02Q-01-00 STRONG C
02Q-01-00
R1
φ28.6
φ26
φ15-0.01 -0.03
25
5
30
φ22.8